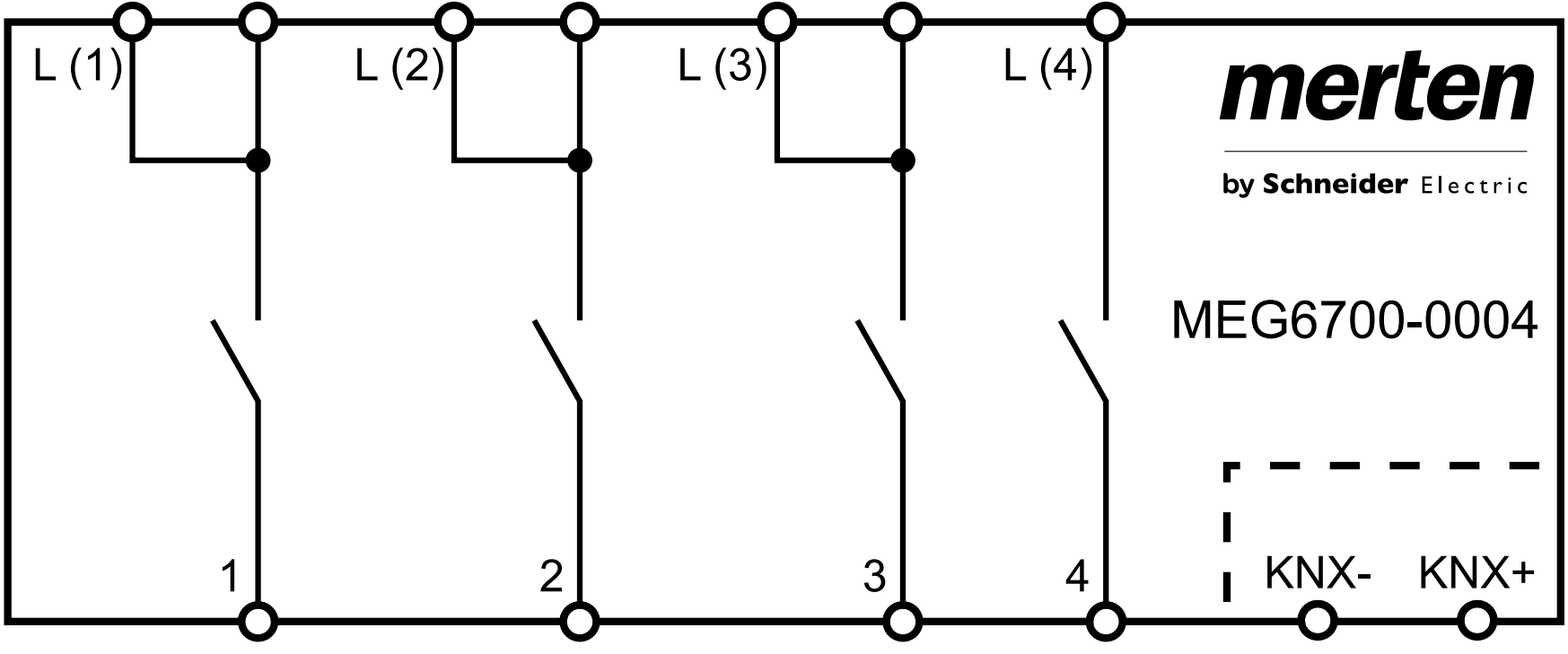
L (1)
L (2)
L (3)
L (4)
merten
by Schneider Electric
MEG6700-0004
1
2
3
4
KNX-
KNX+